24P n.1 CONNECTOR

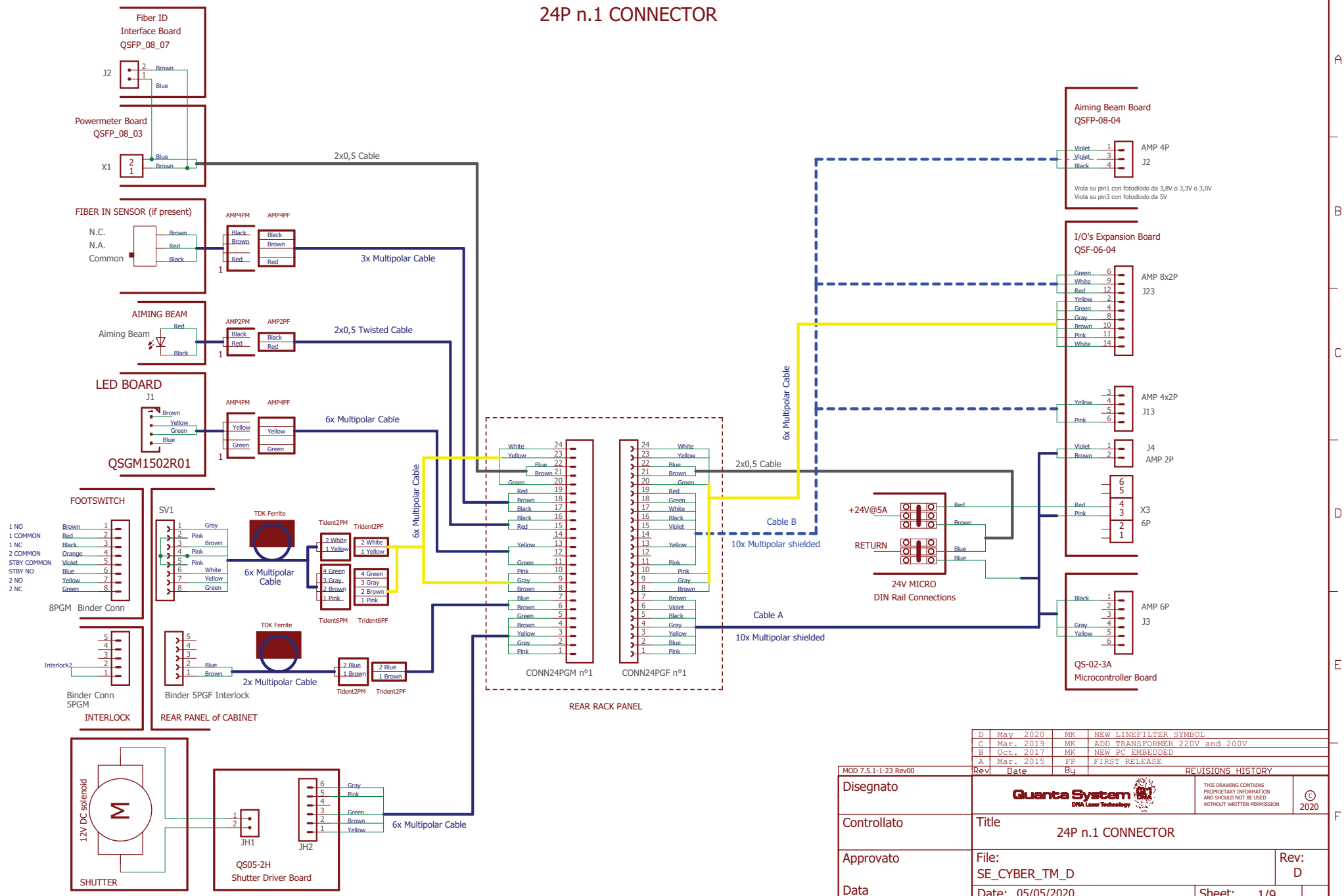

Rev	Date	By	REVISIONS HISTORY
D	May 2020	MK	NEW LINEFILTER SYMBOL
C	Mar. 2019	MK	ADD TRANSFORMER 220V and 200V
B	Oct. 2017	MK	NEW PC EMBEDDED
A	Mar. 2015	FP	FIRST RELEASE

MOD 7.5.1-1-23 Rev00

Disegnato

Controllato

Approvato

Data

Quanta System
DNA Laser Technology

THIS DRAWING CONTAINS PROPRIETARY INFORMATION AND SHOULD NOT BE USED WITHOUT WRITTEN PERMISSION

© 2020

Title: 24P n.1 CONNECTOR

File: SE_CYBER_TM_D

Rev: D

Date: 05/05/2020

Sheet: 1/9

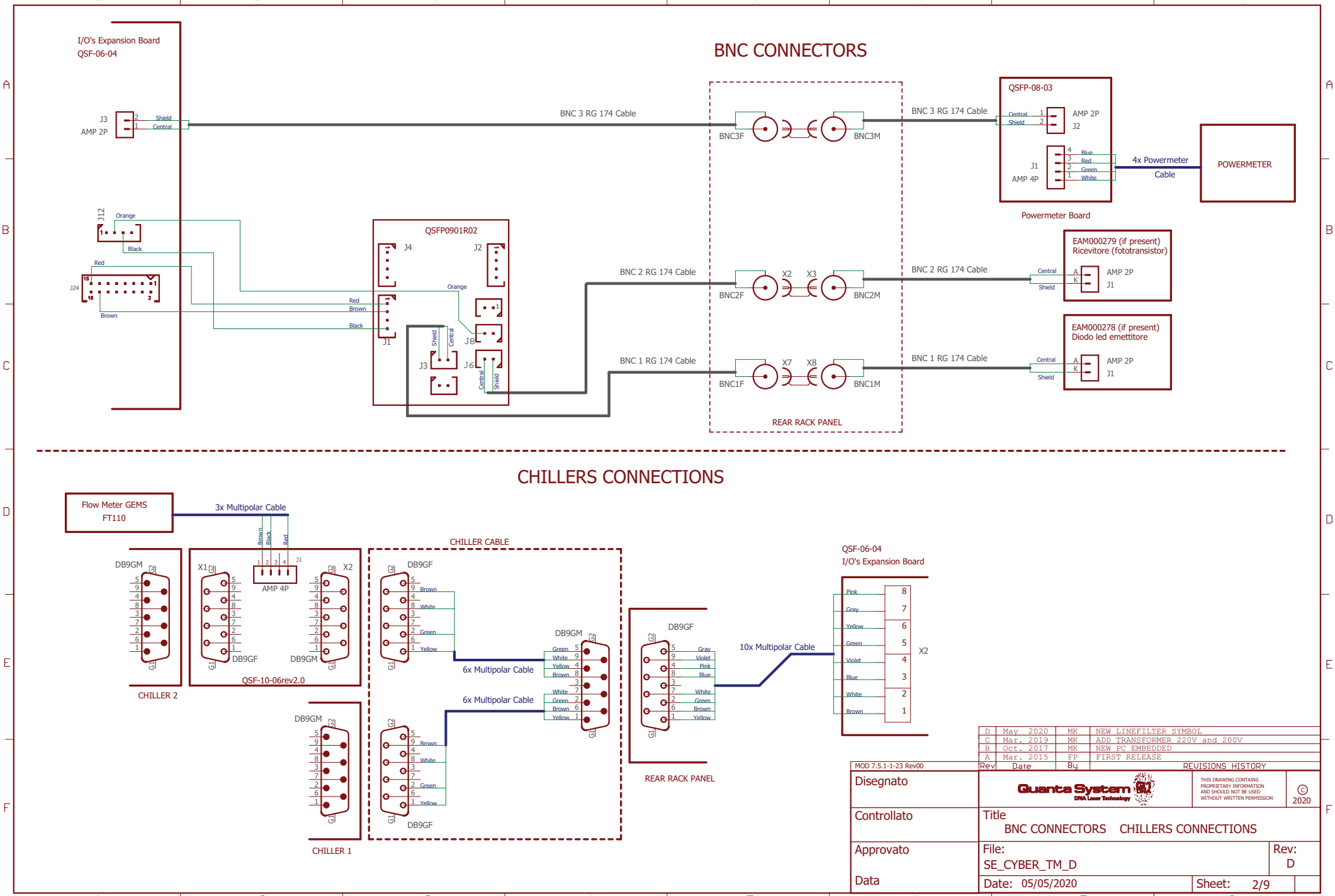

Rev	Date	By	REVISIONS HISTORY
D	May 2020	MK	NEW LINEFILTER SYMBOL
C	Mar. 2019	MK	ADD TRANSFORMER 220V and 200V
B	Oct. 2017	MK	NEW PC EMBEDDED
A	Mar. 2015	FP	FIRST RELEASE

MOD 7.5.1-1-23 Rev00

Disegnato

Controllato

Approvato

Data

Quanta System
DNA Laser Technology

THIS DRAWING CONTAINS PROPRIETARY INFORMATION AND SHOULD NOT BE USED WITHOUT WRITTEN PERMISSION

© 2020

Title
BNC CONNECTORS CHILLERS CONNECTIONS

File:
SE_CYBER_TM_D

Rev:
D

Date: 05/05/2020

Sheet: 2/9

PANEL PC CONNECTIONS

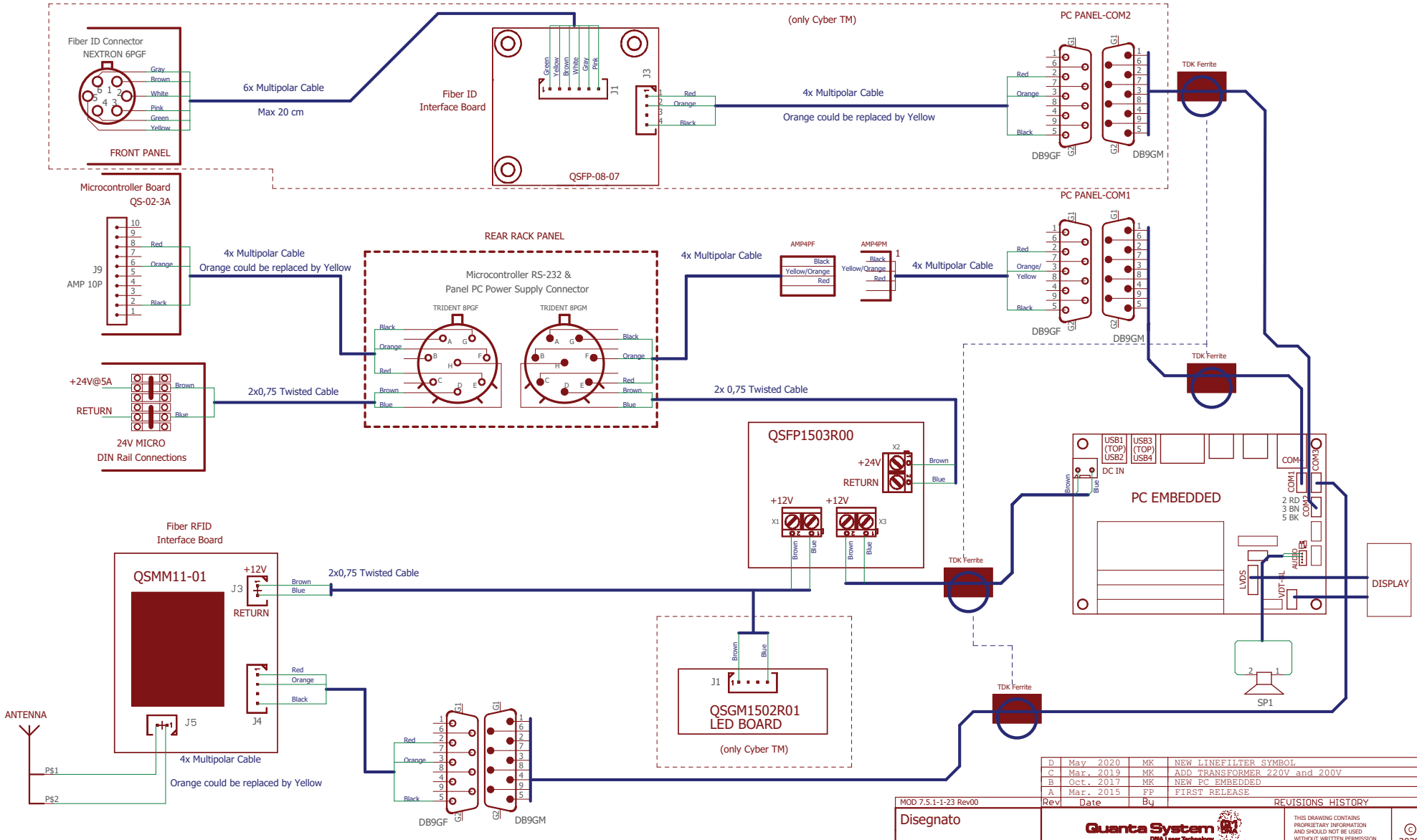

Rev	Date	By	REVISIONS HISTORY
D	May 2020	MK	NEW LINEFILTER SYMBOL
C	Mar. 2019	MK	ADD TRANSFORMER 220V and 200V
B	Oct. 2017	MK	NEW PC EMBEDDED
A	Mar. 2015	FP	FIRST RELEASE

MOD 7.5.1-1-23 Rev00

Disegnato

Controllato

Approvato

Data

Quanta System
DNA Laser Technology

THIS DRAWING CONTAINS PROPRIETARY INFORMATION AND SHOULD NOT BE USED WITHOUT WRITTEN PERMISSION

© 2020

Title: PANEL PC POWER SUPPLY
RS-232 SERIAL CONNECTIONS

File: SE_CYBER_TM_D

Rev: D

Date: 05/05/2020

Sheet: 3/9

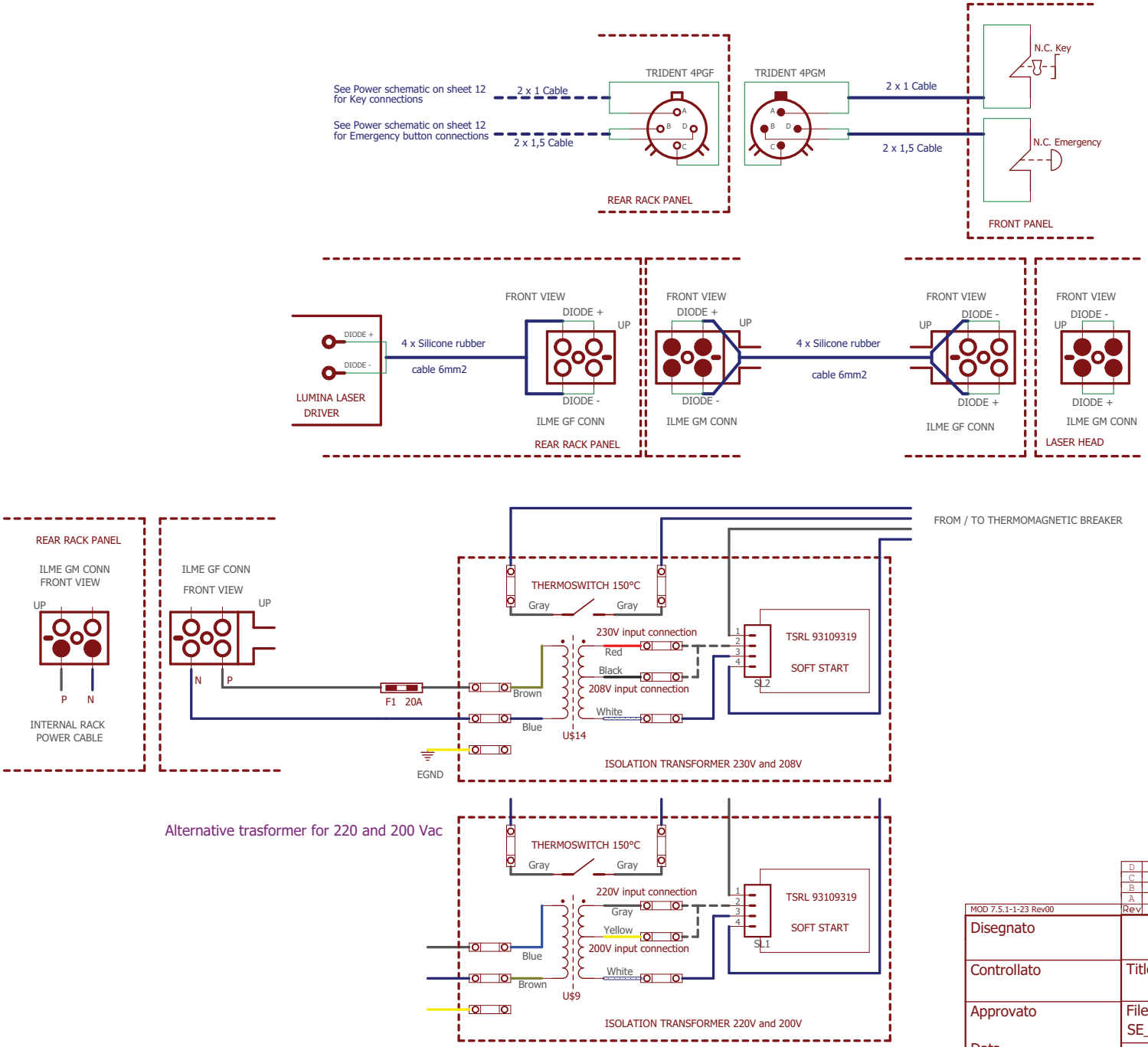

Rev	Date	By	REVISIONS HISTORY
D	May 2020	MK	NEW LINEFILTER SYMBOL
C	Mar. 2019	MK	ADD TRANSFORMER 220V and 200V
B	Oct. 2017	MK	NEW PC EMBEDDED
A	Mar. 2015	FP	FIRST RELEASE

MOD 7.5.1-1-23 Rev00

Disegnato

Controllato

Approvato

Data

Quanta System DNA Laser Technology

THIS DRAWING CONTAINS PROPRIETARY INFORMATION AND SHOULD NOT BE USED WITHOUT WRITTEN PERMISSION

© 2020

Title: KEY & EMERGENCY CABLE, LUMINA CABLE RACK POWER CABLE

File: SE_CYBER_TM_D

Rev: D

Date: 05/05/2020

Sheet: 4/9

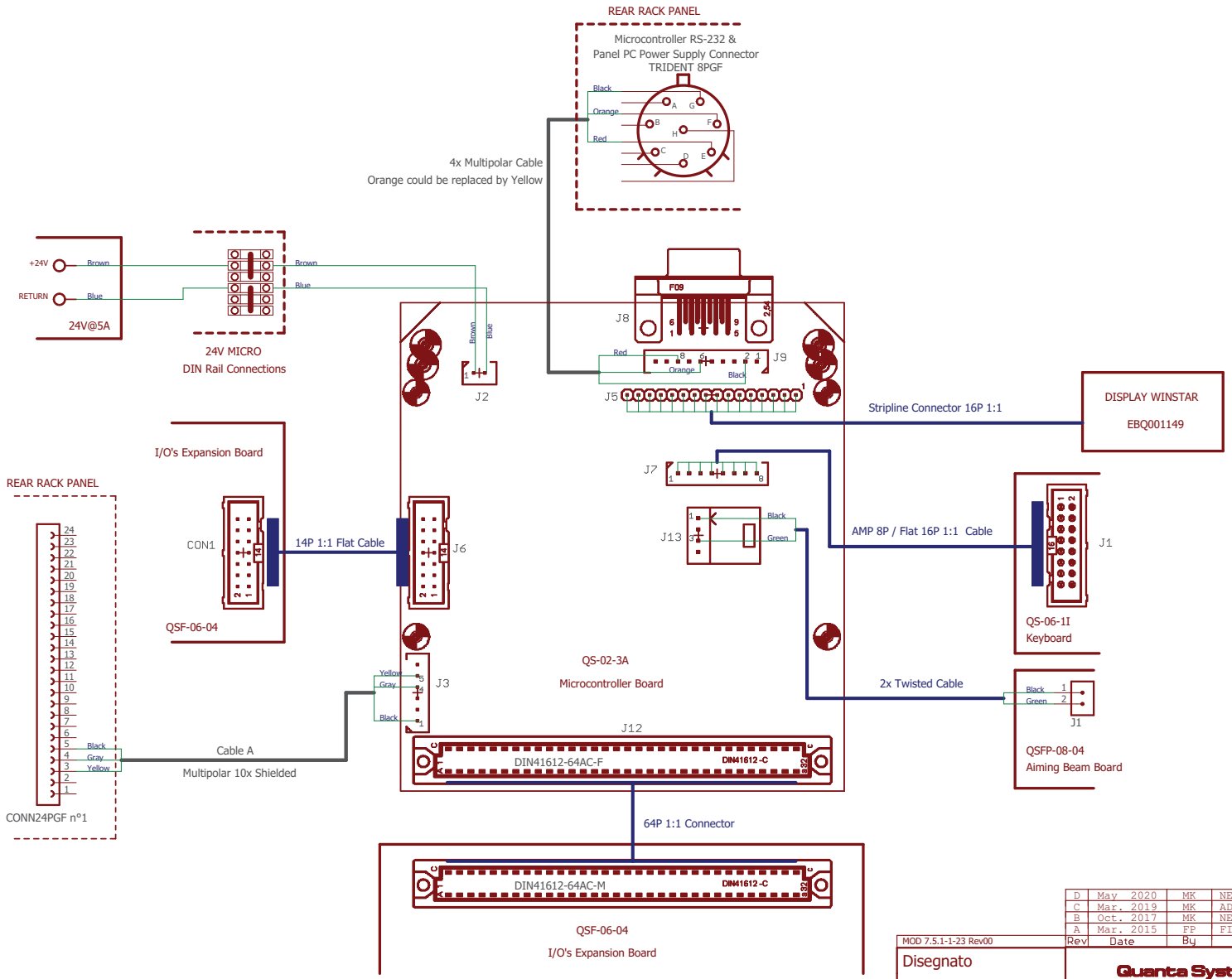

Rev	Date	By	REVISIONS HISTORY
D	May 2020	MK	NEW LINEFILTER SYMBOL
C	Mar. 2019	MK	ADD TRANSFORMER 220V and 200V
B	Oct. 2017	MK	NEW PC EMBEDDED
A	Mar. 2015	FP	FIRST RELEASE

MOD 7.5.1-1-23 Rev00

Disegnato

Controllato

Approvato

Data

Quanta System
DNA Laser Technology

THIS DRAWING CONTAINS PROPRIETARY INFORMATION AND SHOULD NOT BE USED WITHOUT WRITTEN PERMISSION

© 2020

Title
Microcontroller Board

File:
SE_CYBER_TM_D

Rev:
D

Date: 05/05/2020

Sheet: 5/9

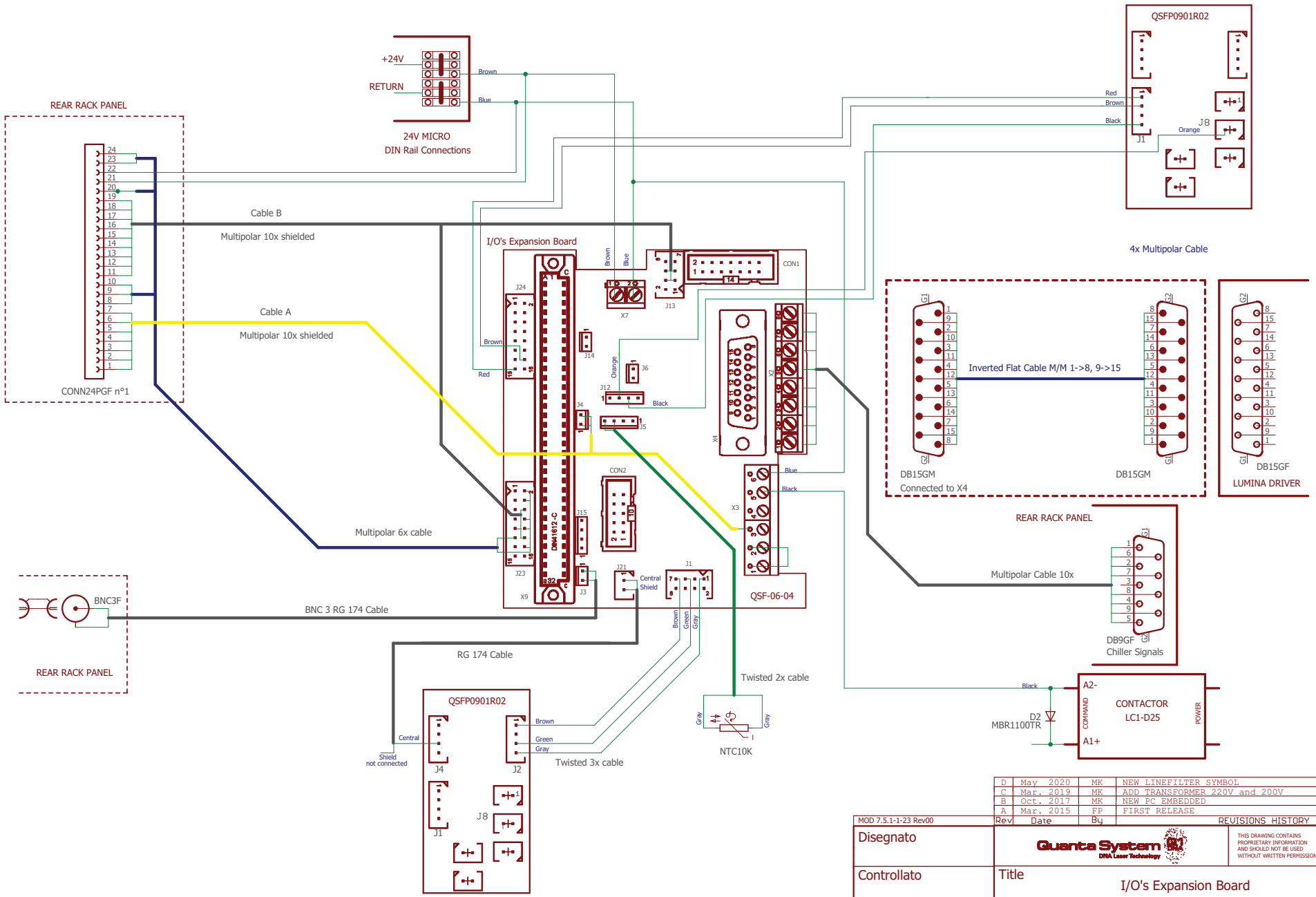

Rev	Date	By	REVISIONS HISTORY
D	May 2020	MK	NEW LINEFILTER SYMBOL
C	Mar. 2019	MK	ADD TRANSFORMER 220V and 200V
B	Oct. 2017	MK	NEW PC EMBEDDED
A	Mar. 2015	FP	FIRST RELEASE

MOD 7.5.1-1-23 Rev00

Disegnato

Controllato

Approvato

Data

Quanta System
DNA Laser Technology

THIS DRAWING CONTAINS PROPRIETARY INFORMATION AND SHOULD NOT BE USED WITHOUT WRITTEN PERMISSION

© 2020

Title: I/O's Expansion Board

File: SE_CYBER_TM_D

Rev: D

Date: 05/05/2020

Sheet: 6/9

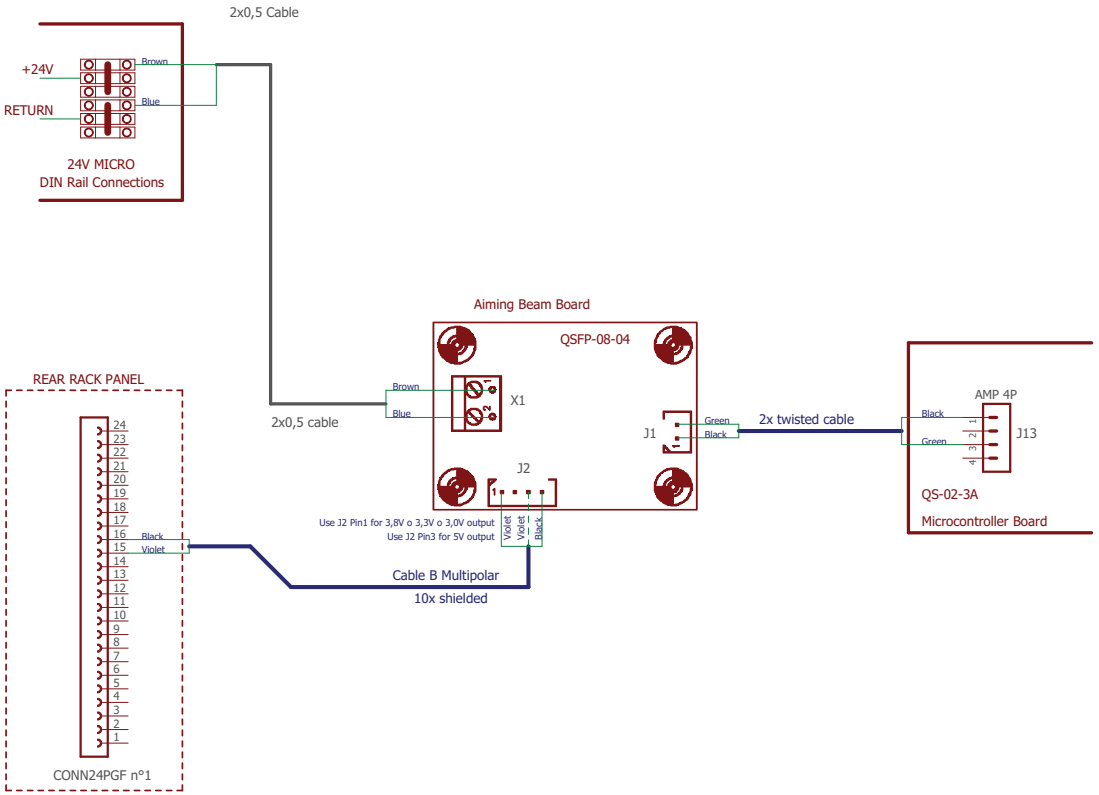

Rev	Date	By	REVISIONS HISTORY
D	May 2020	MK	NEW LINEFILTER SYMBOL
C	Mar. 2019	MK	ADD TRANSFORMER 220V and 200V
B	Oct. 2017	MK	NEW PC EMBEDDED
A	Mar. 2015	FP	FIRST RELEASE

MOD 7.5.1-1-23 Rev00

Disegnato

Controllato

Approvato

Data

Quanta System
DNA Laser Technology

THIS DRAWING CONTAINS PROPRIETARY INFORMATION AND SHOULD NOT BE USED WITHOUT WRITTEN PERMISSION

© 2020

Title
Aiming Beam Board

File:
SE_CYBER_TM_D

Rev:
D

Date: 05/05/2020

Sheet: 7/9

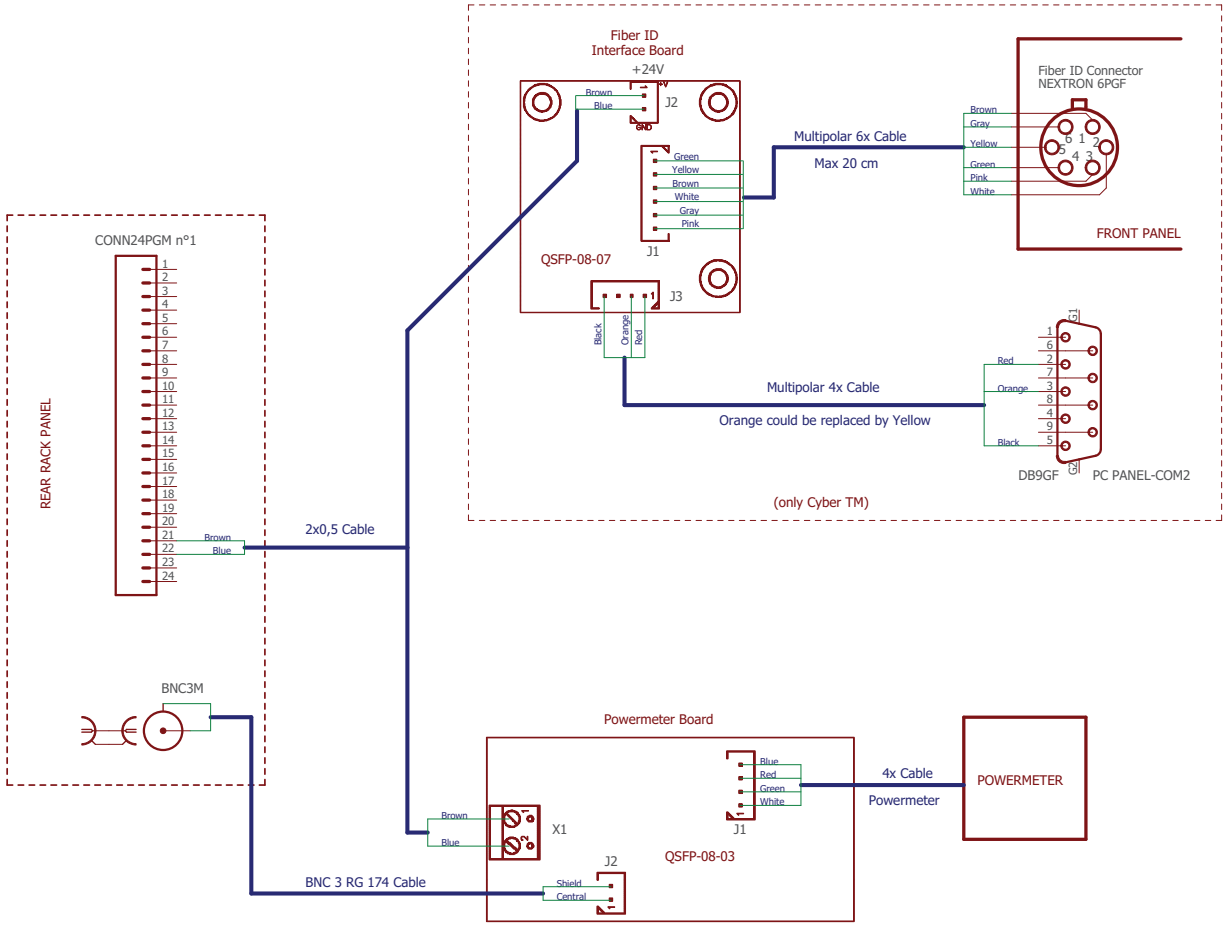

Rev	Date	By	REVISIONS HISTORY
D	May 2020	MK	NEW LINEFILTER SYMBOL
C	Mar. 2019	MK	ADD TRANSFORMER 220V and 200V
B	Oct. 2017	MK	NEW PC EMBEDDED
A	Mar. 2015	FP	FIRST RELEASE

MOD 7.5.1-1-23 Rev00

Disegnato

Controllato

Approvato

Data

Quanta System
DNA Laser Technology

THIS DRAWING CONTAINS PROPRIETARY INFORMATION AND SHOULD NOT BE USED WITHOUT WRITTEN PERMISSION

© 2020

Title: Fiber ID Interface Board
Powermeter Board

File: SE_CYBER_TM_D

Rev: D

Date: 05/05/2020

Sheet: 8/9

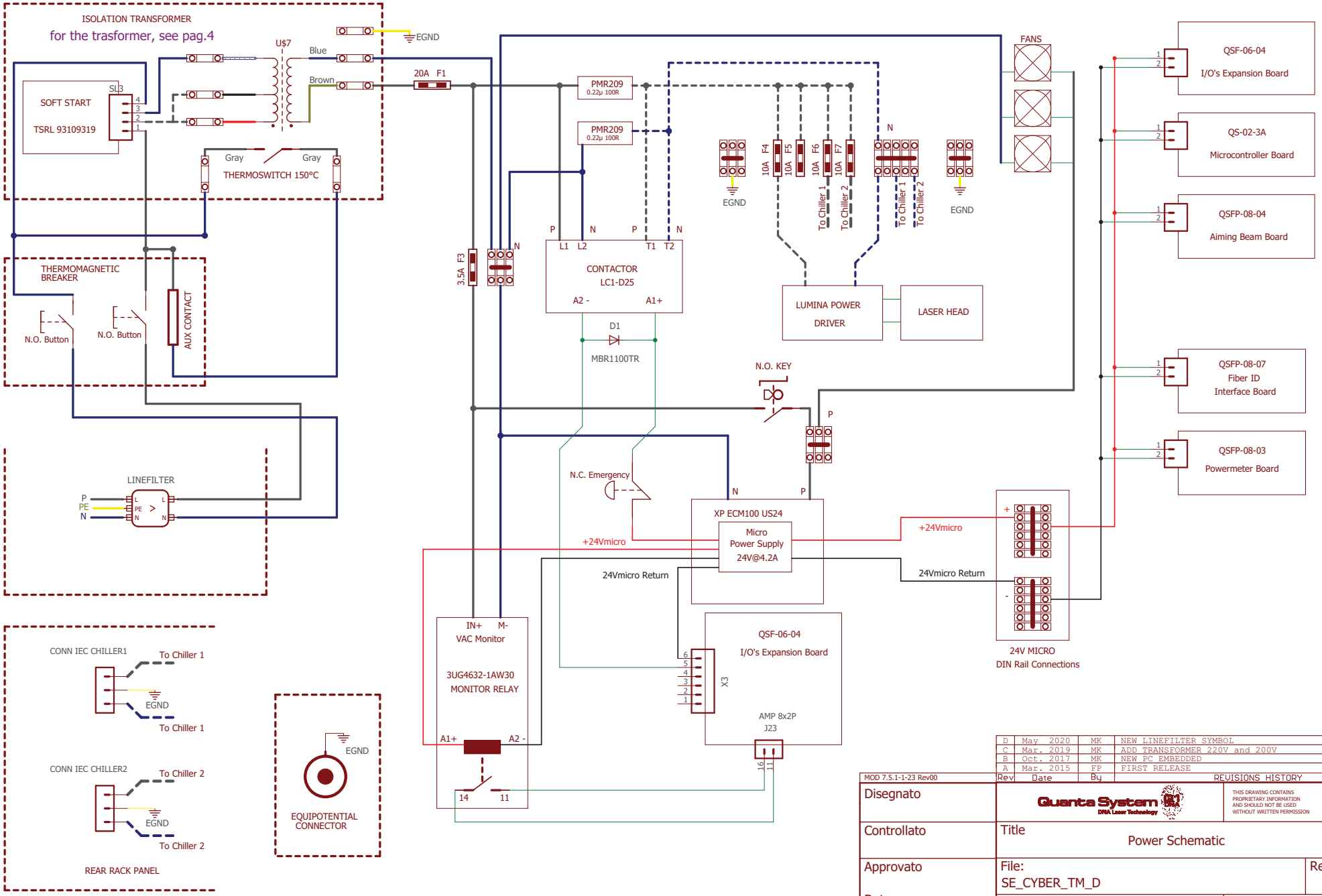

Rev	Date	By	REVISIONS HISTORY
D	May 2020	MK	NEW LINEFILTER SYMBOL
C	Mar. 2019	MK	ADD TRANSFORMER 220V and 200V
B	Oct. 2017	MK	NEW PC EMBEDDED
A	Mar. 2015	FP	FIRST RELEASE

MOD 7.5.1-1-23 Rev00

Disegnato

Controllato

Approvato

Data

Quanta System
DNA Laser Technology

THIS DRAWING CONTAINS PROPRIETARY INFORMATION AND SHOULD NOT BE USED WITHOUT WRITTEN PERMISSION

© 2020

Title
Power Schematic

File:
SE_CYBER_TM_D

Rev:
D

Date: 05/05/2020

Sheet: 9/9