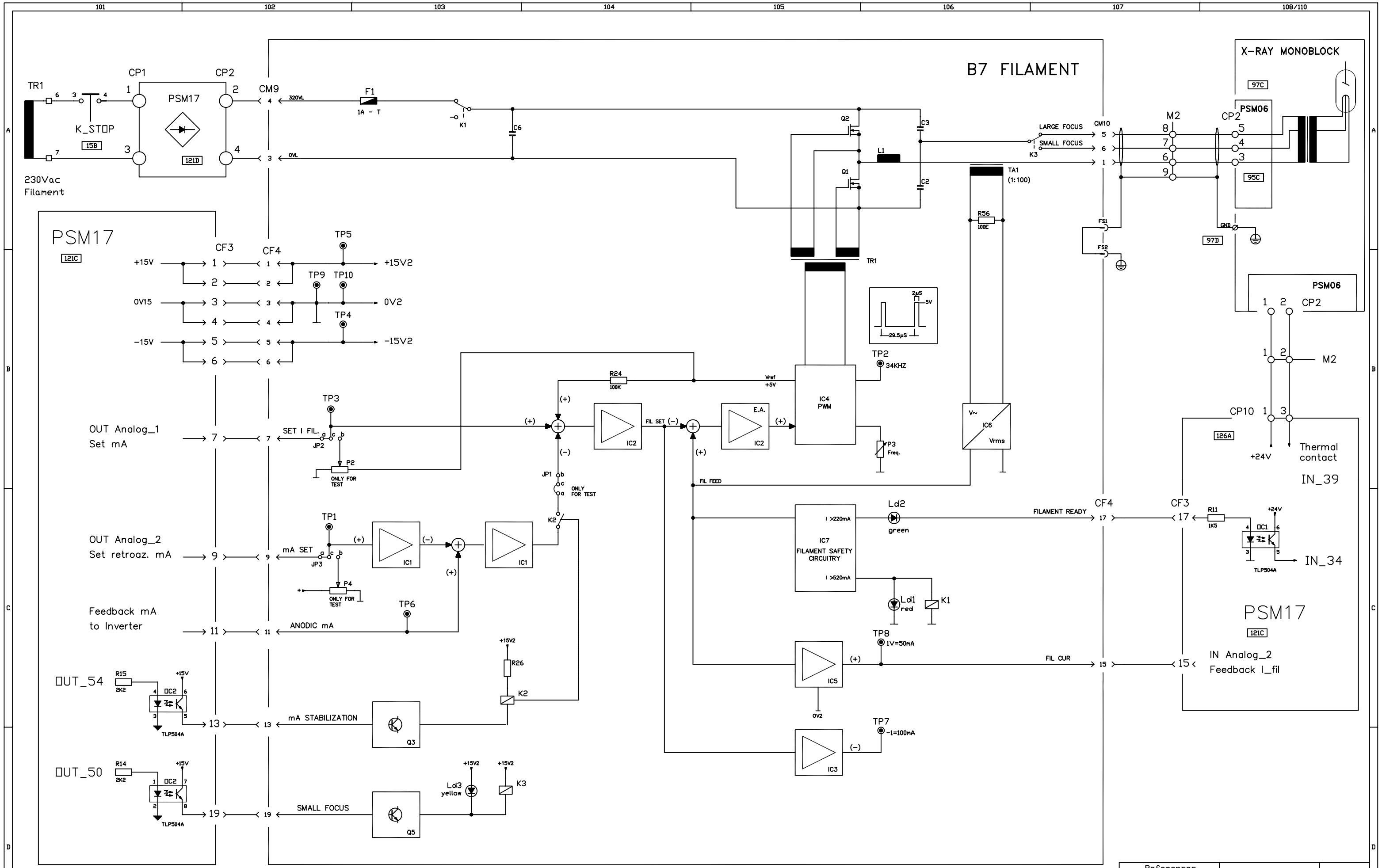

Modification Description	Coordinates	Date	Signature	Replaced N°	Replaced by N°

Drawn:	Date:	Checked:	Date:	Approved:	Date:
C.Bonazzi	01-03-04	C.Bonazzi	01-03-04	C.Bonazzi	01-03-04

References

P.S.M. S.r.l.
Via Orio al Serio 14/16
24050 - Grassobbio (BG) - ITALY

SCHEMATIC FILAMENT BOARD 20kHz B7 MX-350/600

Questo disegno non puo essere riprodotto o reso noto a terzi senza l'autorizzazione scritta del costruttore.

Reproduction or Presentation to Third Persons Prohibited Without Manufacturer Written Authorization.

Code ASH.25.T05.001

Draw 000775 Sheet 1 Of 1