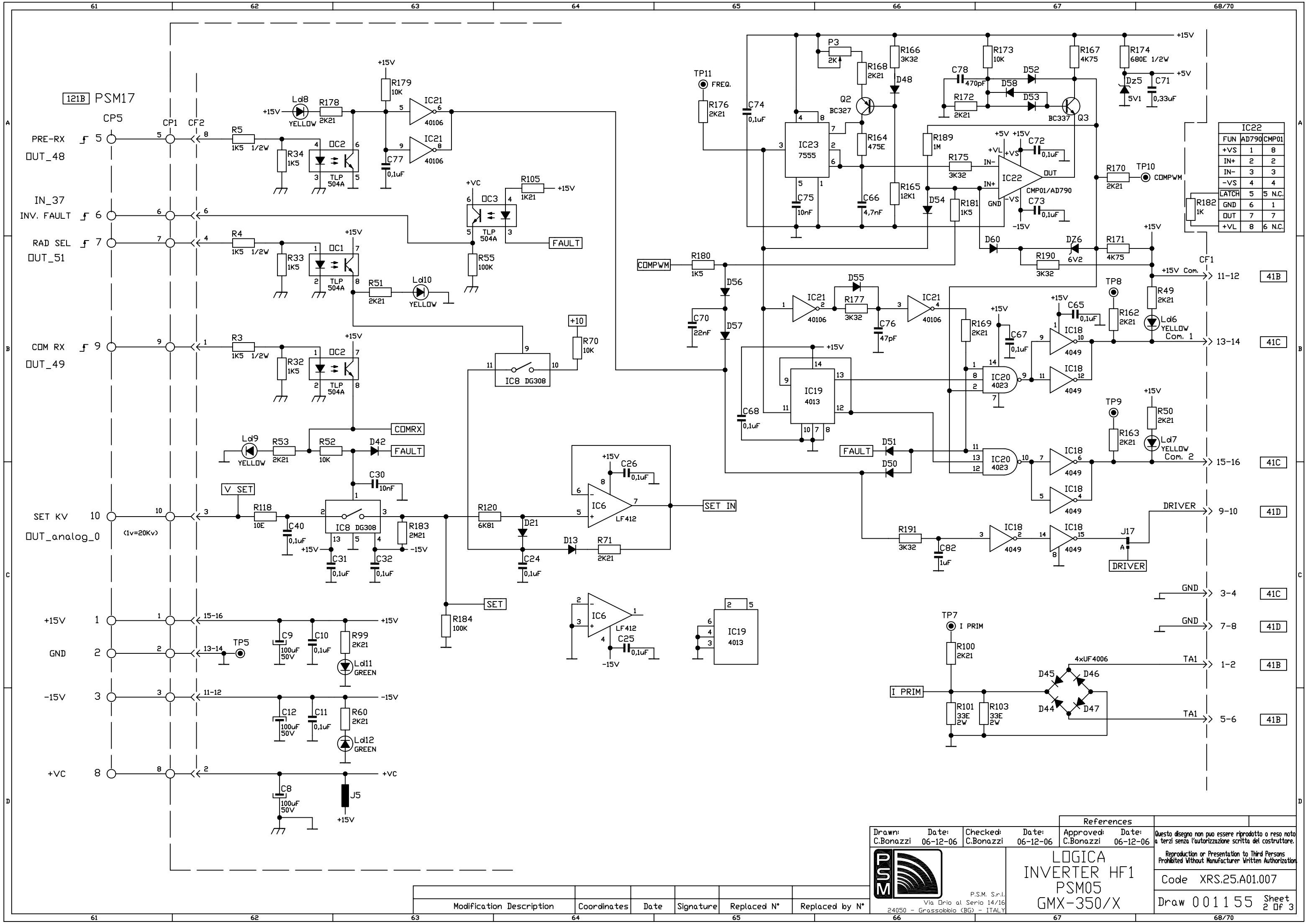

Modification Description	Coordinates	Date	Signature	Replaced N°	Replaced by N°

Drawn:	Date:	Checked:	Date:	Approved:	Date:
C.Bonazzi	06-12-06	C.Bonazzi	06-12-06	C.Bonazzi	06-12-06

References

P.S.M. S.r.l.
Via Orio al Serio 14/16
24050 - Grassobbio (BG) - ITALY

LOGICA INVERTER HF1 PSM05 GMX-350/X

Questo disegno non puo essere riprodotto o reso noto a terzi senza l'autorizzazione scritta del costruttore.
Reproduction or Presentation to Third Persons Prohibited Without Manufacturer Written Authorization.

Code XRS.25.A01.007

Draw 001155 Sheet 2 Of 3